Installation Guide

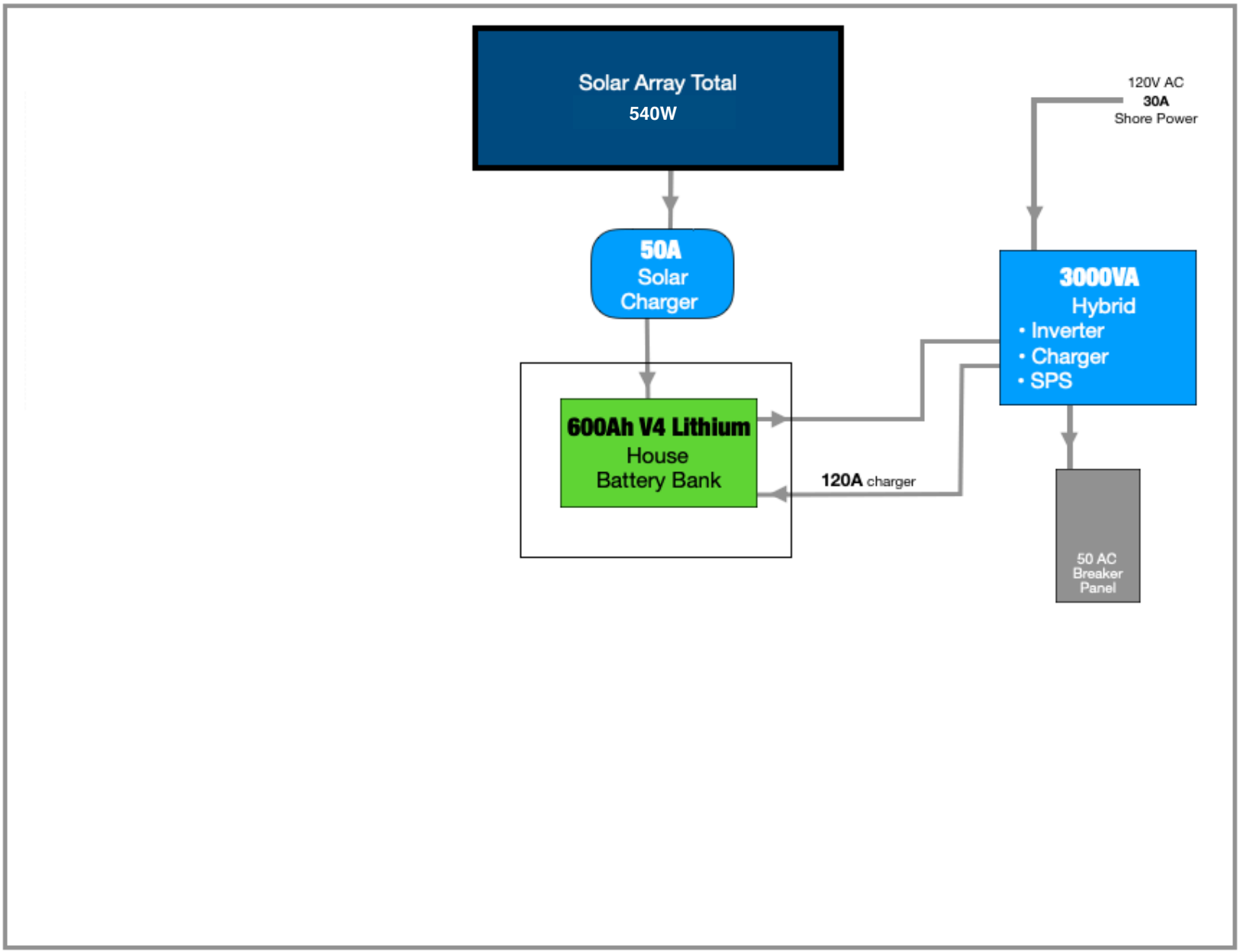

Website Link

AM Solar Inc.
3555 Marcola Rd.
Springfield, OR 97477
541.726.1091
www.amsolar.com

Table of Contents

AM Solar Inc.
3555 Marcola Rd.
Springfield, OR 97477
541.726.1091
www.amsolar.com

General Guidelines and Tips

Congratulations on your purchase of a power system designed by AM Solar! We have assembled this kit to take the guess work out of putting together a complete solar solution. Now the fun begins - It's time for installation. Please read the guidelines below to help ensure a smooth project completion.

Stay safe

Remember that you will be working with both AC and DC power, so whenever possible avoid working with "live" components. Always use caution when working with electricity. When this guide is followed, you'll have a safe and successful installation. Be careful, not frightful - The installation can be fun when following these instructions and not cutting corners.

Keeping a realistic time frame for installation is important

This installation might take 4 to 5 days for an experienced AM Solar technician. So, establishing a realistic goal for completing the installation is helpful and avoids rushing aspects of the project. You'll want to stay consistent with your work beginning to end, without the need to rush.

Don't rush the layout and planning of component placement

The design/layout part of your build is the most important thing you'll do. Grab some chalk, cardboard, rope and a ball of string - We're going to make some component placement templates. Use chalk to outline spots for smaller items such as breakers and the fuse panel. Use the string to make the small wire runs, rope for heavy gauge, and label them (tape and stickers works well). Then layout the all the components that fit the interior of your rig to prepare for installation.

Keep it organized

Stay organized by making your work tidy and well planned. Read the included product guides / instructions and **ABC** (Always Be Checking). If you are installing and find that something was missed during your layout and planning and can't be installed correctly or safely, don't worry! Just backtrack to that stage in your layout design, and find an alternative placement before moving forward.

Making it last

No matter how long you plan on keeping this kit, it's only going to be useful and have value if it's in good order. This equipment doesn't react well to neglect or abuse. When planning and performing the installation, use proper technique and plan for the long run. Using duck tape to secure a part in place might be a good emergency fix, but you'll want to start as "clean" as possible from the beginning.

Component Proximity

Always keep high current lines as short as possible. The battery to inverter cable should be under 10 feet, 5 feet would be ideal. If you are mounting all the equipment in a very small area, be aware of the distance between all "connection points" - If a component comes loose and shifts for any reason, you will want to ensure it will not result in components touching each other and possibly causing a short.

AM Solar Inc.
3555 Marcola Rd.
Springfield, OR 97477
541.726.1091
www.amsolar.com

Suggested Tools For Installation

Here is a list of some of the tools that might be needed for your installation. If you feel this list is too ambiguous or potentially intimidating, now would be a great time to schedule your installation work with the professionals at AM Solar.

- Sturdy Ladder
- Hammer Crimper
- Hammer
- Heat Gun
- Wire Crimper
- Wire stripper
- Cable Cutter
- Multimeter
- Screwdriver
- Smartphone
- Drill
- Box knife
- 91% Isopropyl Alcohol
- Cleaning rags
- Crescent wrench
- Safety glasses

AM Solar Inc.
3555 Marcola Rd.
Springfield, OR 97477
541.726.1091
www.amsolar.com

99-TRLGLD Deluxe Shell Complete System

Rev.20190813

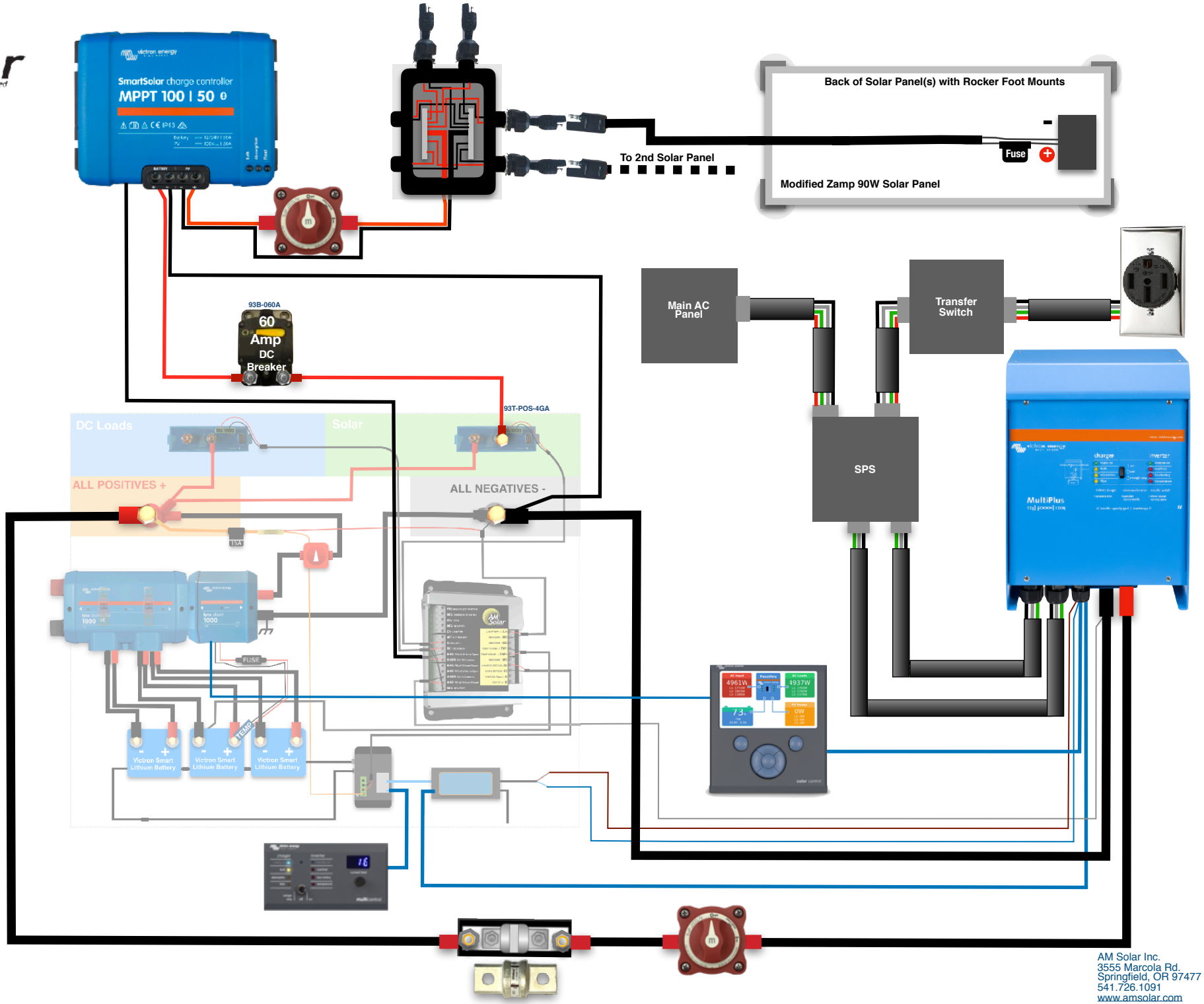

AM Solar Inc.
3555 Marcola Rd.
Springfield, OR 97477
541.726.1091
www.amsolar.com

Bill of Materials

	QTY	AMS PN	Description
	6	SOLAR-ZS90S	Solar Panel Z90 Short
	6	92C-PREP	Panel Prep Kit
	6	92C-ROOF	Roof Wire Harness Acc. Kit
	90	CABLE-10GA-2-GRY	Duplex-10/2
	24	MOUNTA-35	Mount Adapter-35mm
	12	MOUNTL-3	L Foot-3 Hole
	12	MOUNTL-T3	L Foot-Tall 3 Hole
	20	FSTBLT-TKNOB	T Mount Knob
	6	FSTSET-ZAMP	Mnt Hardware for Zamp Panels, set of 4
	20	FSWASH-FLT-5/16	Flat Washer 5/8 OD- 5/16 ID S
	20	FSWASH-SPL-1/4	Washer-Split 1/4" SS
	48	FSTSCW-1034SS	Screw-#10x3/4" PHP SMS SS
	60	TAPE-VHB	3M VHB Tape-4950
	3	SEAL-SKF	Sikaflex 221
	1	20-ROOF	Roof Combiner Box
	1	30s-VT-MPP-50A	SunRunner Victron MPPT 50A
40s-43LIBASE	1	BATTBMS-VTLYNX	Lynx Distributor
	1	BATTBMS-VT-BUS	VE.Bus BMS
	1	FUSE-MEGA-250A	MEGA-FUSE 250A/32V 5 Pack
	1	CABLE-VT-RJ45-3	RJ45 UTP Cable 3 m
	2	RELAY-VTSMBP100	Batt Protect, Smart 12/24-100A
	1	BATTBMS-AMSLB43	AMS Lithium Control Board V4.3
	1	TEMP-BS	Blue Sky Temperature Sensor
	1	93S-MINI	Switch-Mini On/OFF with Screws
	1	93F-ATC-015A	15A ATC Fuse Kit
	1	93P-RED	Junction Post Kit Positive
	1	93P-BLK	Junction Post Kit Negative
	4	FSTSCW-1034Z	Screw-#10x3/4" PHP SMS Z
	4	FSTSCW-1058SS	Screw-#10x5/8" PHP SMS SS
	2	FSTSCW-612-SS	Screw-#6x1/2" PHP SS
	6	CABLE-4/0-1-BLK	Cable 4/0
	24	CABLE-18GA-2-GRY	Duplex-18/2
	4	CABLE-2-1-RED	Cable-2 ga. Red
	1	CABLE-VT-M8-1	Victron M8 circular connector M/F 3 pole cable 1m
	6	LUG-4/0-RING-3/8	4/0 Lug-3/8" Ring
	4	LUG-2GA-RING-3/8	2 ga. Lug-3/8" Ring
	1	LUG-18GA-RING-BR	18-22 ga. Ring Bare
	2	93H-B3/4	Heat Shrink Black 1.5" x 3/4"
	4	93H-R3/4	Heat Shrink Red 1.5" x 3/4"
	5.5	HS-BLK-DWALL-3/16	Heat Shrink 3/16" Black - Cut into twelve 1/2" pieces
	4	HS-RED-HD-1/2	Heat Shrink 1/2" Red

	QTY	AMS PN	Description
94Vs-200	3	BATTLI-VT-200	LiFePO4 Battery 12,8V/200Ah - BMS
	18	CABLE-2/0-1-BLK	Cable 2/0
	12	LUG-2/0-RING-3/8	2/0 Lug-3/8" Ring
	6	93H-B3/4	Heat Shrink Black 1.5" x 3/4"
	6	93H-R3/4	Heat Shrink Red 1.5" x 3/4"
60-VTLNX	1	MONITOR-VT-LNXSHNT	Victron Battery Lynx Shunt VE.Can
	1	CABLE-VT-RJ45-10	Victron RJ45 UTP Cable 10m
	4	FSTSCW-101SS	Screw-#10x1" SQ DR TEK SS
	1	FUSE-CNN-800A	800A CNN fuse for Lynx shunt
60-VTCCM	1	MONITOR-VTCC	Color Control GX Retail
	1	CABLE-VT-RJ45-10	RJ45 UTP Cable 10 m
	1	CABLE-VT-D-0.9R	Victron VE.Direct Cable 0.9M (one side Right Angle conn)
	1	CABLE-VT-D-10R	VE.Direct Cable 10m (one side Right Angle conn)
	1	MONITOR-VTWI	Victron CCGX WiFi module simple (Nano USB)
	2	FUSE-MINI-005A	Mini Fuse-5 Amp
	1	FUSEHLDR-MINI	Mini Fuse Holder & Cap
	1	SPLICE-14-BUTT-SD	14-16 ga. Butt Step-Down
	1	LUG-18GA-RING-BR	18-22 ga. Ring-Bare
	1	LUG-10GA-RING-HS	10-12 ga. Ring-H.S.
	30	CABLE-18GA-2-GRY	Duplex-18/2
	2	HS-BLK-DWALL-3/16	Heat Shrink 3/16" Black (cut into four pieces)
99-VT3000KIT	1	INV-VT-3000	MultiPlus 12/3000/120-50 120V VE.Bus Inverter/Charger
	1	MONITOR-VTDM	Digital M. Contr.200/200A GX
	1	CABLE-VT-RJ45-5	RJ45 UTP Cable 5 m
	1	50-TSFMB1	Smart ATS 50A V1.0
	8	LUG-4/0-RING-3/8	4/0 Lug-3/8" Ring
	12	CABLE-4/0-1-BLK	Cable 4/0
	6	93H-R3/4	Heat Shrink Red 1.5" x 3/4"
	2	93H-B3/4	Heat Shrink Black 1.5" x 3/4"
	1	95F-CLST-400A	400A Class T Fuse & Holder
	1	FUSE-CLST-400A	Spare 400 Amp Fuse
	1	WIRETIE-05	Wire Tie 5-7/8"
	1	93S-MINI	Switch-Mini On/OFF with Screws
	16	CABLE-6GA-3-GRY	Stranded 6/3
	1	BRKR-AC-SLIM-050A	GE Slim Breaker 50A
	2	BRKR-AC-SLIM-020A	GE Slim Breaker 20A
	3	BRKR-AC-SLIM-015A	GE Slim Breaker 15A
	33	CABLE-6GA-4-GRY	Stranded 6/4
	4	STRN-S-1	Strain Relief 1"
	2	STRN-S-3/4	Strain Relief 3/4"
	1	BOX-PD5500	AC Load Center w/ 2 x 50A legs
	1	BOX-PD6000	DC Load Center (mate to PD5500)
	1	TRNSFR-PD52DCSV	Transfer Switch, 50A w/Surge Protection
	1	CORD-50A-25-L	Shore Power Cord, 50A, 25' Locking
	1	INLET-50A-SS	Power Inlet - 50A - Stainless
	1	98-EASY	Easy Start Kit

Solar Panels

Charge Controller

Lithium Base Kit

Inverter 3000

Lithium Batteries

Color Control

AM Solar Inc.
3555 Marcola Rd.
Springfield, OR 97477
541.726.1091
www.amsolar.com

Battery Bank

The battery bank is the heart of the system. Its components usually take up the most space and all other subsystems connect to it. That's why we recommend installing it first. This battery bank consists of a 200Ah Lithium Battery. The Bluetooth battery monitor reads all charging and discharging current through a shunt and is able to interpret that data to compute battery usage, remaining energy, percent charge, etc. When a shunt is used, the load side of the shunt becomes the new negative battery terminal and no negatives will connect to the actual battery.

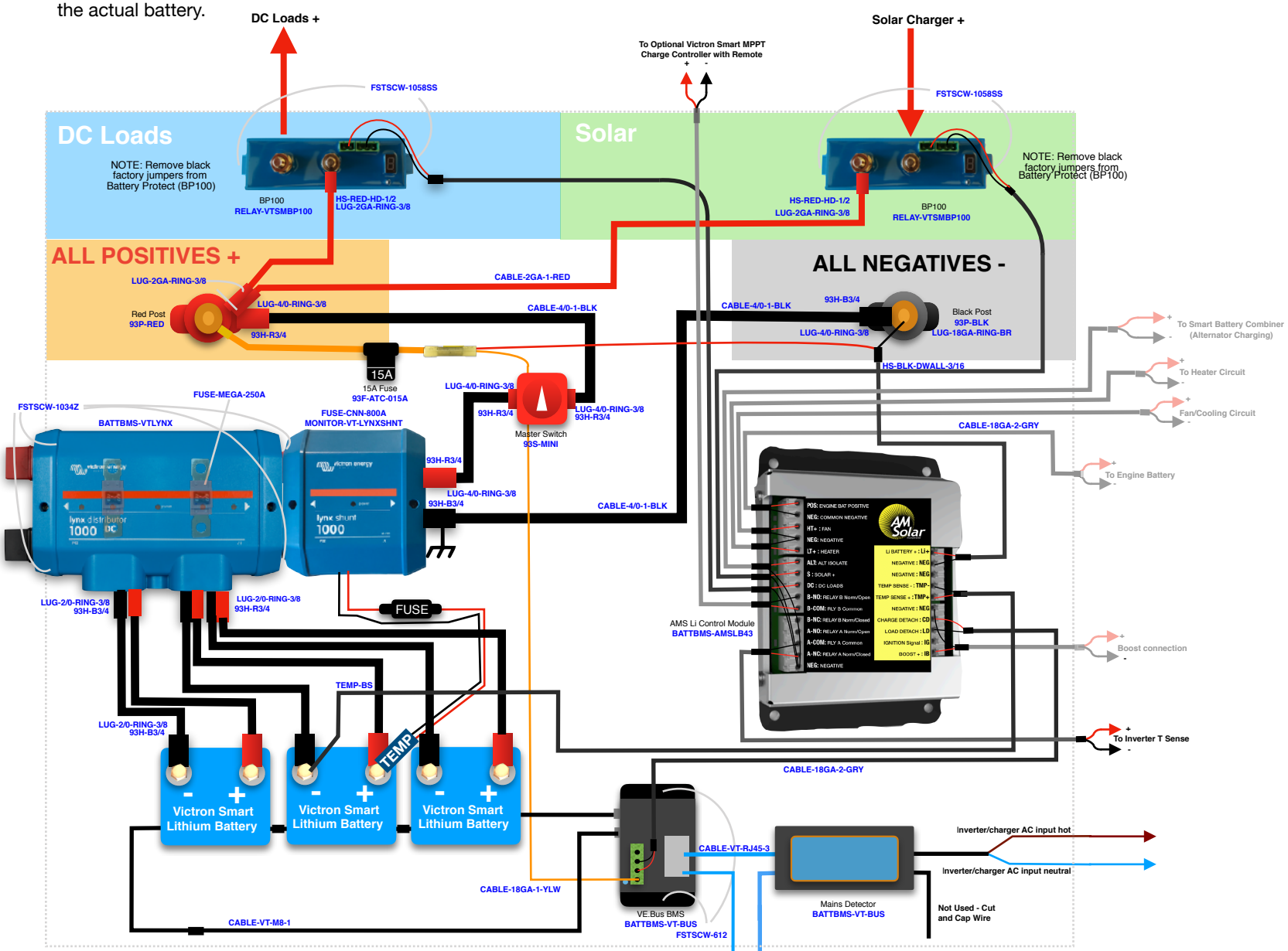

NOTE: The batteries are greyed out and shown for representational purposes. They are not included in the base kit.

AM Solar Inc.
3555 Marcola Rd.
Springfield, OR 97477
541.726.1091
www.amsolar.com

AM Solar Lithium Control Board

NOTE: Depending on your needs, you may not utilize all the output ports on the Lithium Control Module.

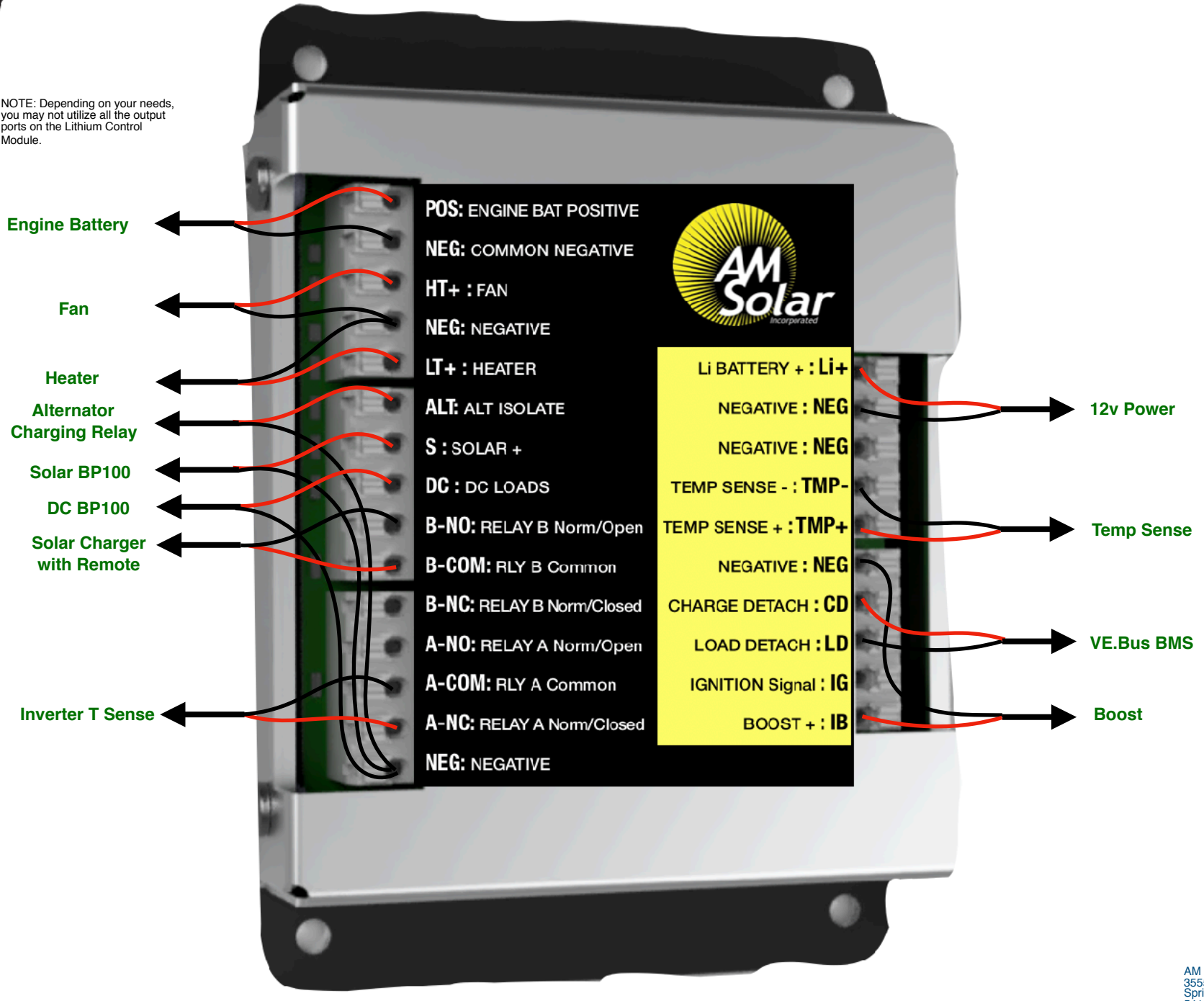

AM Solar Inc.
3555 Marcola Rd.
Springfield, OR 97477
541.726.1091
www.amsolar.com

99-TRLGLD Deluxe Shell Solar

Rev.20190813

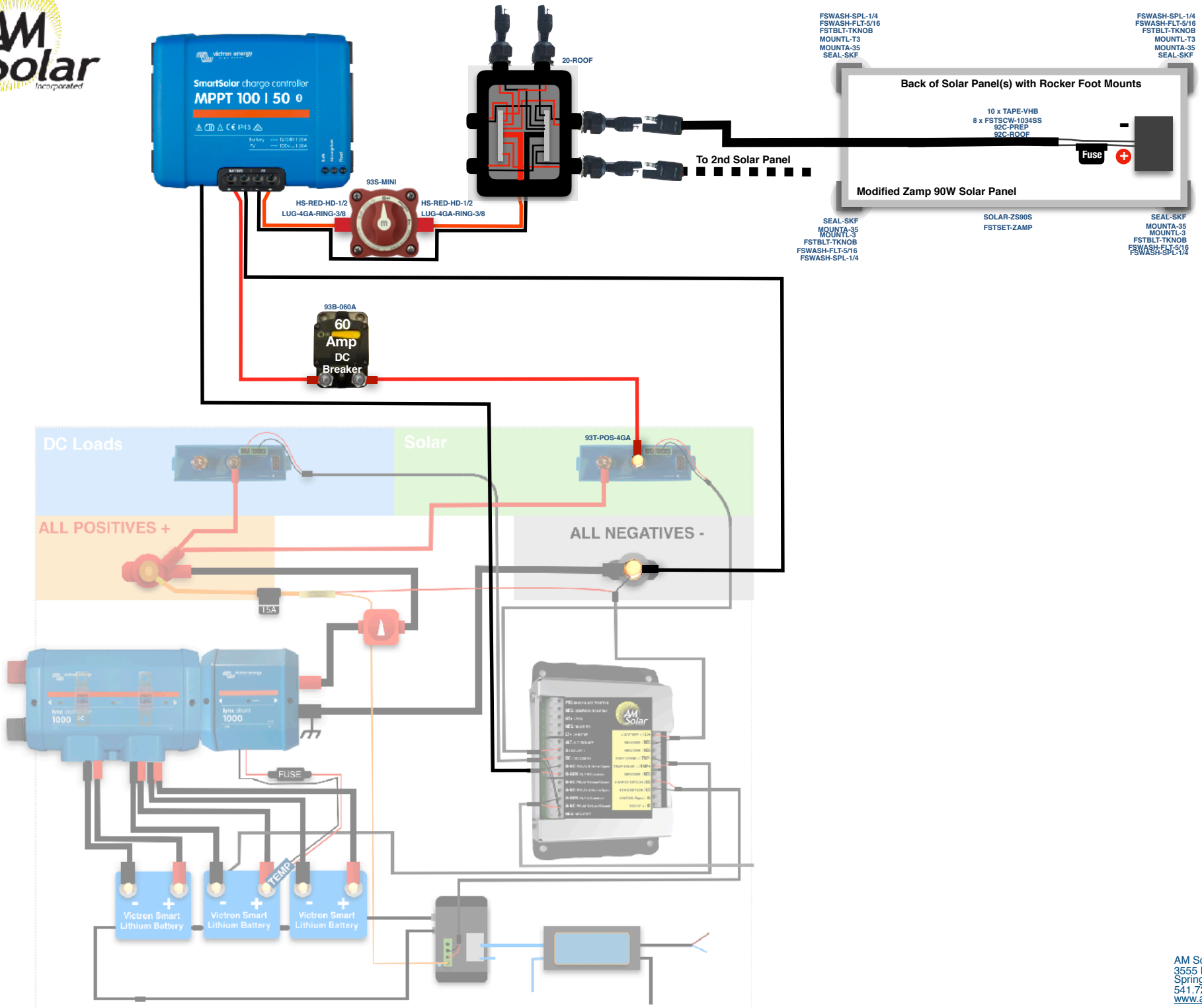

AM Solar Inc.
3555 Marcola Rd.
Springfield, OR 97477
541.726.1091
www.amsolar.com

99-TRLGLD Deluxe Shell Inverter

Rev.20190813

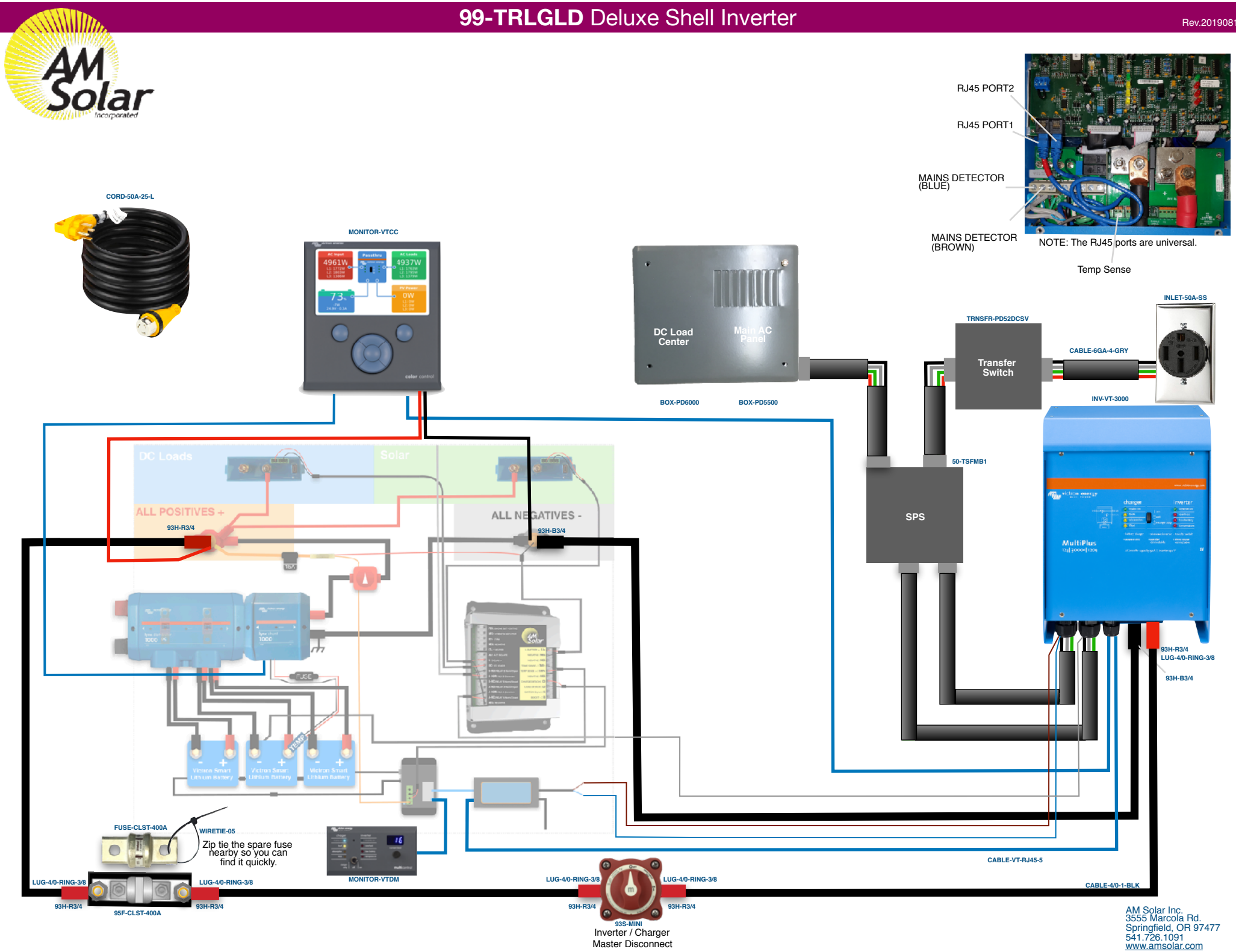

AM Solar Inc.
3555 Marcola Rd.
Springfield, OR 97477
541.726.1091
www.amsolar.com

99-TRLGLD Deluxe Shell SPS Wiring

Rev.20190813

AM Solar's SPS

Full Passthrough All the time!

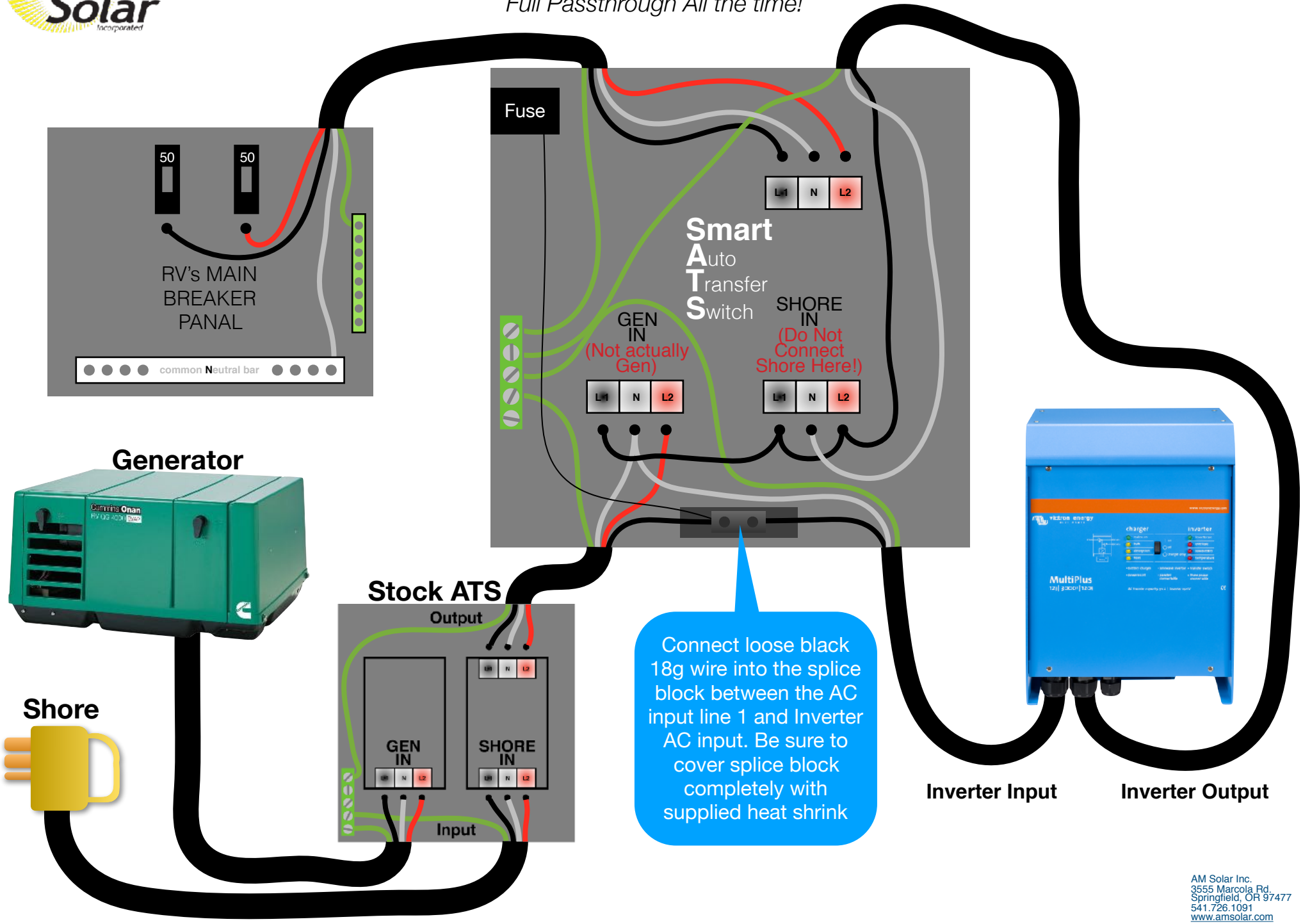

AM Solar Inc.
3555 Marcola Rd.
Springfield, OR 97477
541.726.1091
www.amsolar.com

Programming / Commissioning Your System - The Smart BP-100 Battery Protection

1. Supply 12V power to the BP (+ to IN post, - to GND pin).
2. Open VictronConnect and select the Battery Protect.
3. The first screen has a switch to manually toggle the relay.
4. Click the gear in the top right to enter Settings.
5. Select “user defined” from the Preset menu.
6. Enter the following values:
   - Shut down: 10.5v
   - Restart: 11.5v
7. Mode: Leave on “B”
8. Alarm output: Select ”Relay” from the menu.

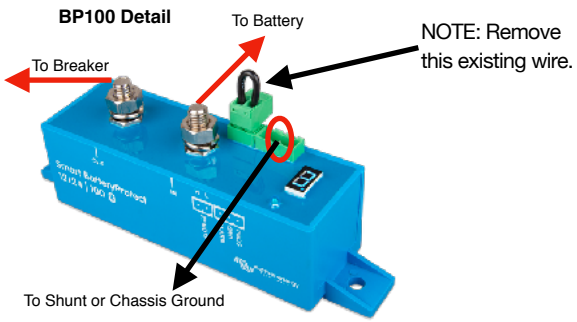

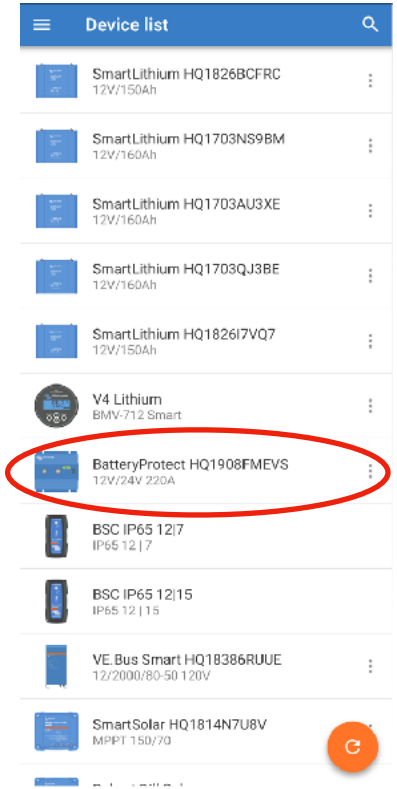

2. Select BatteryProtect from VictronConnect

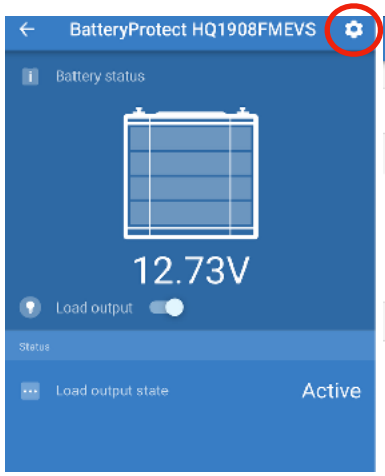

4. Select the gear icon

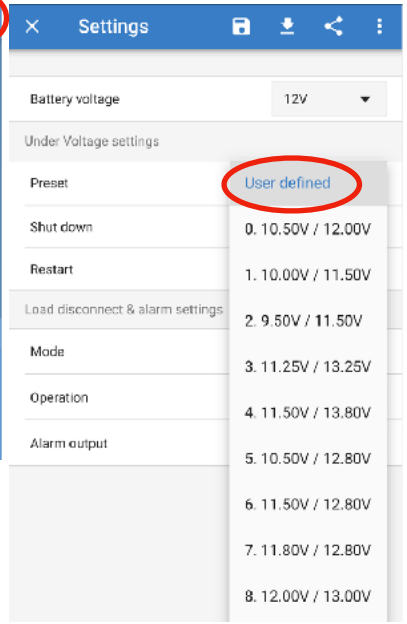

5. Select “User defined” from the Preset menu

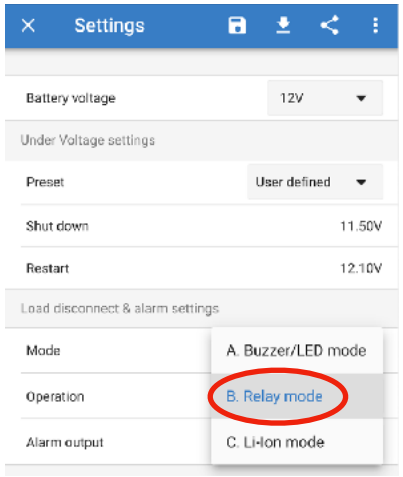

7. Mode should be set to “Relay mode”

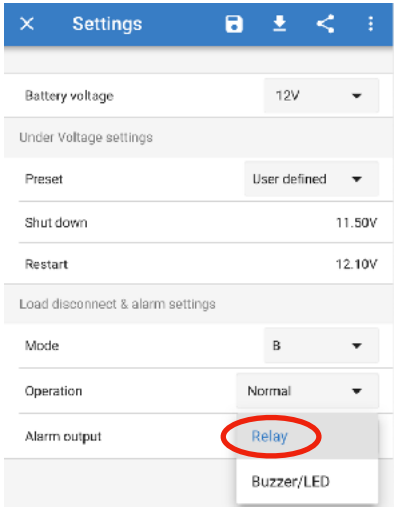

8. Alarm output: Select “Relay”

NOTE: These setting were chosen on the conservative side, but can be adjusted depending on your needs. Do not lower the shut down voltage until you are very familiar with your system, since dropping below 12v may result in battery degradation.

If your battery protect shuts down your loads, it’s important you recharge your batteries up to a full charge as soon as possible.

AM Solar Inc.
3555 Marcola Rd.
Springfield, OR 97477
541.726.1091
www.amsolar.com

Programming / Commissioning Your System - The BMV-712 Smart Battery Monitor

We recommend you interface with the BMV-712 through the Victron app on your phone, and change the settings from there. The app is named “VictronConnect”. Ensure your Bluetooth is enabled before entering the app. Once inside the app you will see your BMV-712 displayed, click on it to change the applicable settings:

Program Settings for Lithium Batteries

- **Battery Capacity**: Enter the total battery capacity in Amp Hours.
- **Charge Voltage**: 13.9
- **Tail Current**: 2%
- **Peukert Exponent**: 1.1
- **Charge Efficiency Factor**: 98%
- **Temperature Unit**: “CELC” (Celsius) or “FAHR” Fahrenheit
- **Aux Input**: User Option (“Temp” works best)

Programming on the BMV-712 Battery Monitor:

1. Download “Victron Connect” from the App Store (picture 1).
2. Turn on your Phone’s Bluetooth, and get as close as possible to your Victron Component(s).
3. Open the Victron Connect app, and after it takes a moment to scan it will recognize your BMV-712.

NOTE: *If your device is not shown, it is probably signal interference. Try closing the app and moving to a different location before re-entering the app in a location that can pick up the BMV signal.*

4. Select the BMV-712 on the Device List (picture 2).
5. Press the gear icon in the top right corner (picture 3).
6. Enter “Battery Settings” and change the values below (similar to picture 4):
7. **Changing Battery Capacity**: Enter the number of Ah of your entire battery bank
8. **Charge Voltage**: 13.9
9. **Tail Current:** 2%
10. **Peukert Exponent:** 1.1
11. **Charge Efficiency Factor:** 98%
12. Go back to settings, enter “Misc”
13. **Temperature Unit:** Fahrenheit
14. **Aux Input**: User Option (“Temp”)
15. Exit from the device.

NOTE: *Only one phone can be connected to each device at a time. Be sure to completely disconnect and close the app to log out from the device.*

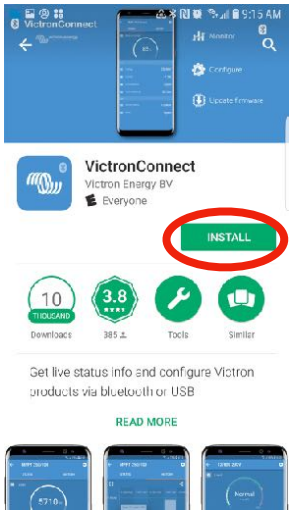

1

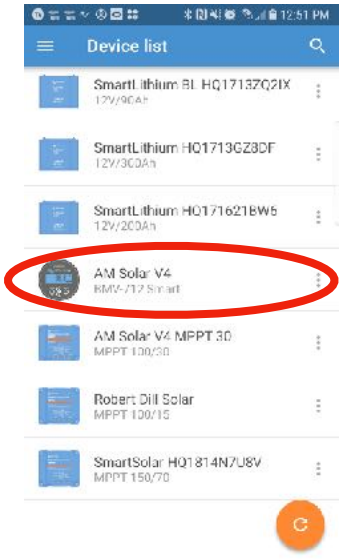

2

3

4

NOTE: To change the PIN code from the app, go back to the device list page in the app. Click on the three circles to the right of your device, and select “Reset PIN code”.

AM Solar Inc.
3555 Marcola Rd.
Springfield, OR 97477
541.726.1091
www.amsolar.com

Programming / Commissioning Your System - The Charge Controller

Charge Control Settings for Lithium Batteries:

1. Download the "VictronConnect" App to your phone.
2. Open the App.
3. You'll see a selection for your SmartSolar MPPT Charger, select it.
4. Type **000000** to login for the first time.
   NOTE: To change the PIN code, go back one step to the main screen. Click on the 3 buttons to the right of the controller image, and select "Reset PIN Code".
5. Click on the **gear** in the top right corner.
6. Click on "Battery".
7. Click on the settings and adjust them accordingly to match below:
   - Battery voltage: 12V
   - Max charge current: 50A (In this example)
   - Use default charge settings: OFF
   - Charger: ON
   - Absorption voltage: 14.20 V
   - Absorption Time Limit: 01:00
   - Float voltage: 13.50 V
   - Equalization voltage: 14.20 V
   - Auto Equalization: DISABLE (OFF)
   - Temperature compensation: OFF

Victron Lithium

Victron Blue Solar MPPT with Bluetooth or MPPT Control

Absorption Voltage	14.20V
Absorption Time limit	1:00
Float Voltage	13.50V
Equalization Voltage	14.20V
Auto Equalization	OFF
Temperature Compensation	OFF
Temperature Compensation	

Download VictronConnect In App Store

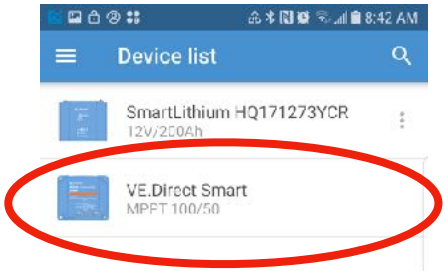

Device List within VictronConnect

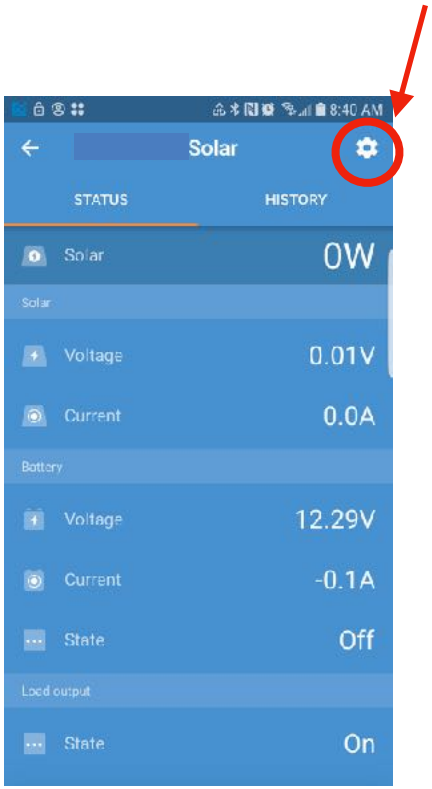

MPPT Charge Controller Screen

Programming: Linking All Victron Devices on Smart Network

Creating The Network

1. When in the Victron Connect App, click on one of your devices.
2. Go to “Settings” (shown as a gear symbol in the top right, picture 1).
3. Go to “VE.Smart networking” (picture 2).
4. Go to “Create Network” (picture 3).
5. Enter a name for your network (picture 4).

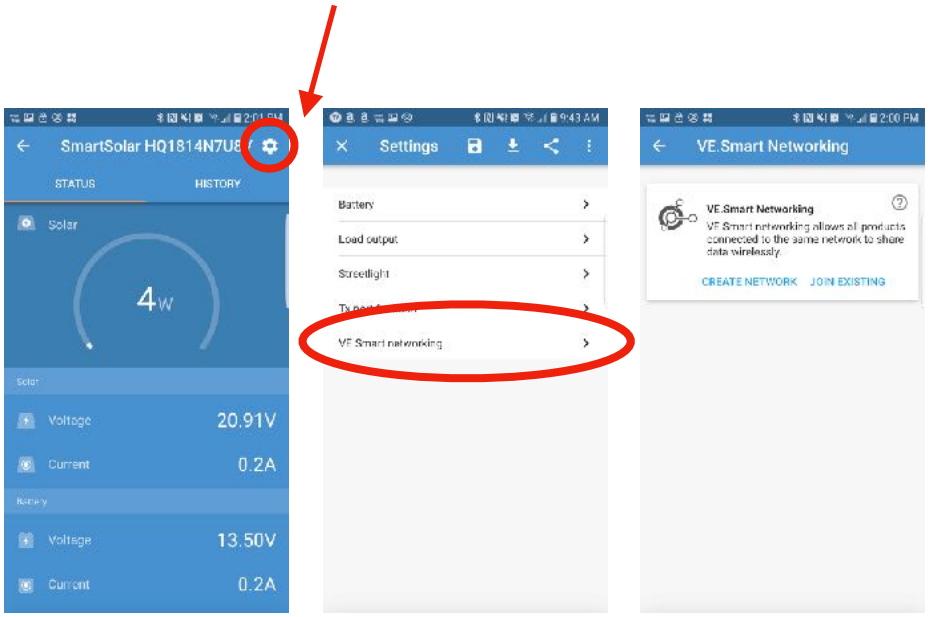

1 2 3

Linking Each Device:

1. Enter the Victron Connect App and click on a device.
2. Go to “Settings” (shown as a gear symbol in the top right, picture 1).
3. Go to “VE.Smart networking” (picture 2)
4. Go to “Join Existing Network” (picture 3)
5. Select the network you just created (picture 5).
6. This device is now joined to the network (picture 7). Repeat this step for every other bluetooth enabled device.

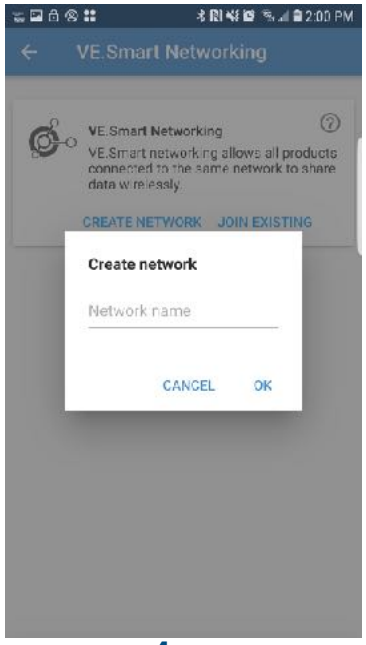

4

5

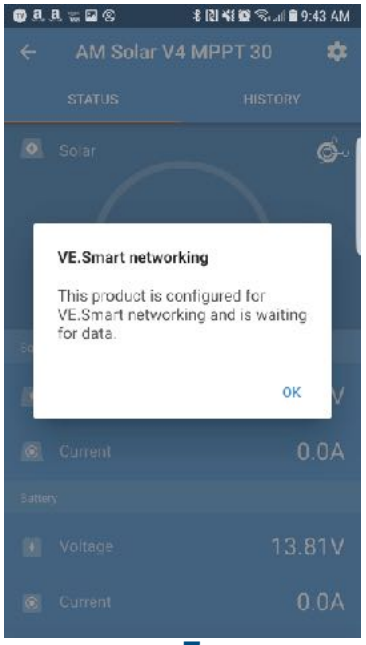

7

Programming Your Victron Color Monitor

Connecting Your Victron Display to Wireless:

1. Press the top right button on the display (menu), and use the down directional button to scroll to Settings. Enter the Settings screen by pressing the center button when “Settings” is highlighted.
2. Use the down directional button to scroll to “Wifi” (near the bottom of the list). Press the center button when highlighted to enter Wifi.
3. Highlight the network you are connecting with, using the up and down directional buttons to scroll if needed. Press the center button to connect once the wireless network is highlighted.

If a password is required, it will prompt you here. Use the up and down directional buttons to select letters. Press the right directional button to move to the next letter. Press the center button when the full password is entered.

4. The connection could take up to 1 minute to complete. Ensure it displays “connected” when done. You now have internet access to your display. Be sure to remain within the wireless signal range during the duration of the firmware upgrade in the next step.

Bottom Directional Button

Top Directional Button

Updating The Display Firmware:

1. Use the left direction button to go back to the “Settings” screen.
2. Use the down directional button to scroll to “Firmware” (2nd down from the top), and press the center button once highlighted.
3. Select “Online updates”. Press the center. Button once highlighted.
4. Select “Check for Updates”. It will proceed with checking for updates.
5. Select “Perform Updates”. It can take up to 5 minutes for the updates to be applied and the system to reboot.
6. It should now display a message stating it’s on the latest version in the “Firmware” section.

These devices connect via Bluetooth to communicate with a smartphone using the VictronConnect app.

Helpful Notes:

- Pressing the center button will always select what is highlighted.
- Pressing the left arrow will take you back to the previous screen.
- Pressing the top right button will pull up the Settings page.

AM Solar Inc.
3555 Marcola Rd.
Springfield, OR 97477
541.726.1091
www.amsolar.com

Recording the VRM Portal ID:

1. Go back to Settings, then enter “VRM Online Portal”.
2. Take a photograph of the VRM online portal ID for future reference.

Changing Settings:

1. Go to settings, enter “general”, then turn remote support (SSH) on.
2. Take photo or document the remote support port number displayed.
3. Go back to settings, then enter “Remote Console”.
4. Turn “Enable on VRM” to on.
    1. Ensure you select “No Password Required”
5. Go back to settings, then enter Date and Time and set date/time.
6. Go back to settings, enter “General” then select “reboot?”.
7. Enter settings once rebooted, then enter Services and turn on VRM two-way communication.
8. Go to Settings, then enter “System Setup”.

- Change all settings to the following:
    - AC Input 1: **Shore Power**
    - AC Input 2: **Generator**
    - Battery Monitor: **Automatic**
    - Has DC System: **On**

      The following are only visible after the firmware upgrade, leave these as the default:

      DVCC: **Off**
      SVS: **Off**
      Limit Charge Current: **On**
      Max Charge Current: 3**00A** (Ensure this number is adequate and safe)

AM Solar Inc.
3555 Marcola Rd.
Springfield, OR 97477
541.726.1091
www.amsolar.com

Troubleshooting Steps

Steps to take before calling AM Solar:

1. Get a voltmeter and test the voltage of the batteries directly to ensure they aren't drained.

   - If you aren't familiar with how to operate your voltmeter, test it on a known power source like your car starter battery to ensure you are reading it correctly.

2. If your problem is related to solar:

   - Perform a system reset on the solar side. First disconnect the panels from the controller, usually done with an on/off switch. Then disconnect the battery from the controller. After 10 seconds, reconnect the battery to the controller and give it 15 seconds to boot up. Then reconnect solar.

   - Download the latest version of the VictronConnect App to your device, and attempt to reconnect

3. If you problems is related to the inverter:

   - Power cycle the inverter by powering it off and back on.

   - Check the display(s) to ensure it isn't remotely powered off, or the current limit is set too low to not allow enough power from shore.

4. Check all connection points to ensure there are no loose connections.

5. Check all on/off switches to ensure they are on, and all DC breakers are reset.

6. Check all inline fuses to ensure they haven't blown. You have the following fuses in this kit, with a spare included for each:
   - Inverter 300Amp Class T Fuse
   - Victron BMS 15A fuse
   - Temperature Sensor Fuse

7. Power cycling the entire system by turning the master electrical on/off switch to off, give it 5 seconds, and then back on.

If you are still having issues with your system, call AM Solar at 541-726-1091 to be put into our troubleshooting queue. Give us a shout ***before*** you get a headache and we'll help you through things! Please have a volt meter handy and performed the applicable tests above before contacting us. We'll be glad to help get you back up and running as quickly as possible!

AM Solar Inc.
3555 Marcola Rd.
Springfield, OR 97477
541.726.1091
www.amsolar.com